PCE-5129

LGA1151 6th Generation Intel® Core™ i series SHB DDR4/SATA 3.0/USB3.0/M.2/ Dual GbE/3 Displays

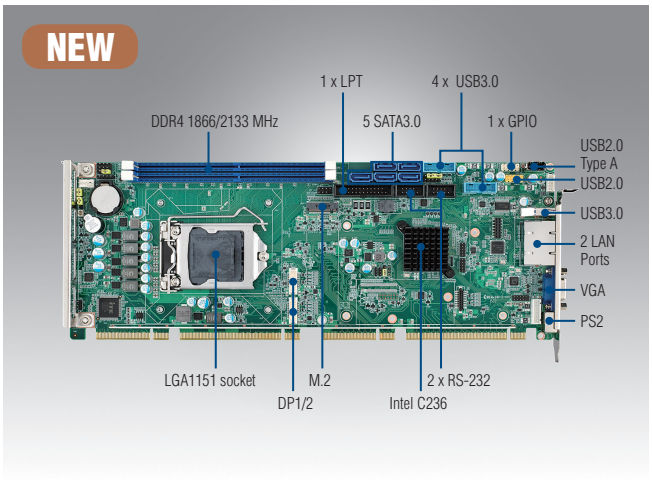

Features

- Supports Intel® Core™ i7/i5/i3 LGA1151 processors with Q170
- Dual Channel (Non-ECC) DDR4 1866/2133 up to 32 GB
- Supports PCIE 3.0, M.2, USB 3.0, SATA3.0, SW Raid 0, 1, 5, 10
- Supports CRT and 2 x DVI-D/DP (cable optional) display
- Supports out-of-band remote management with AMT11.0
- Supports Advantech LPC modules
- Supports SUSIAccess and Embedded Software APIs

Quiet

CE FCC

Specifications

Processor System	CPU	i7-6700	i7-6700TE	i5-6500	i5-6500TE	i3-6100	i3-6100TE	G4400	G4400TE	G3900	G3900TE
	Base Frequency	3.4GHz	2.4GHz	3.2GHz	2.3GHz	3.7GHz	2.7GHz	3.3GHz	2.9GHz	2.8GHz	2.6GHz
	L3 Cache	8MB	8MB	6MB	6MB	4MB	4MB	3MB	3MB	2MB	2MB
	SKU/Chipset	Intel Q170									
	BIOS	AMI 128Mbit SPI Flash									
Bus	PCI-Express	One x16 and one x4 to backplane									
	PCI	Four 32-bit 33 MHz PCI Masters to backplane									
Memory	Technology	Dual channel (Non-ECC) U-DIMM DDR4 1866/2133 MHz (Note: support DDR4 1024M x 8 memory technology)									
	Max. Cap.	32 GB (16 GB per DIMM)									
	Socket	DDR4 288 pins DIMM x 2									
Graphics	Controller	Chipset integrated Intel HD Graphics									
	VRAM	Shared system memory is subject to OS									
	CRT	Supports resolution up to 1920 x 1200 pixel @ 60MHz									
	DVI-D	Supports resolution up to 1920 x 1200 pixel @ 60MHz									
	Display Port	Supports resolution up to 4096x2304 @ 60Hz, 24bpp (Supporting 4K display required two DDR channels of same size)									
	Triple Display	CRT+DP/DVI-D+DP/DVI-D									
Ethernet	Interface	10/100/1000 Mbps									
	Controller	LAN 1: Intel I219LM LAN 2: Intel I211									
	Connector with LED	RJ45 x 2									
Rear I/O	USB 3.0	1									
	Ethernet	2									
	VGA	1									
	PS/2	1 (PS/2 Y cable supports 1 x keyboard and 1 x mouse)									
Internal Connector	USB	7 USB2.0 (Pin-header*2+USB Type A*1+ 4 on backplane); 4 USB3.0 (Pin header)									
	SATA (SW Raid 0,1,5,10)	5									
	M.2 (2280 Type M)	1 (Support SATA3.0 or PCIex4 device)									
	DP/DVI-D	2 (Pin header)									
	COM	2									
	Parallel	1									
	IrDA	1									
	GPIO	8bit									
Watchdog Timer	Output	System reset									
	Interval	Programmable 1-255 sec									
Miscellaneous	Audio	Intel High Definition audio interface (required an audio extension module P/N: PCA-AUDIO-HDA1E)									
Power Requirement	Test environment	SKL 2.2G 65W DDR4 2133 8GB x 2									
	Voltage	+12V	+5V	+3.3V	+5Vsb	-12V	-5V				
	Current	2.64A	1.23A	0.19A	0.09A	0.06A	0V				
Environment		Operating				Non-operating					
	Temperature/Humidity	0 ~ 60° C(32~140° F); Depends on CPU and cooler solution Operating humidity: 40° C @ 85% RH Non-Condensing				-40 ~ 85°C and 60° C @ 95% RH Non-Condensing					
Physical	Dimensions	338 mm (L) x 122 mm (W) (13.3" x 4.8")									

All product specifications are subject to change without notice

Last updated : 20-Oct-2015

Block Diagram

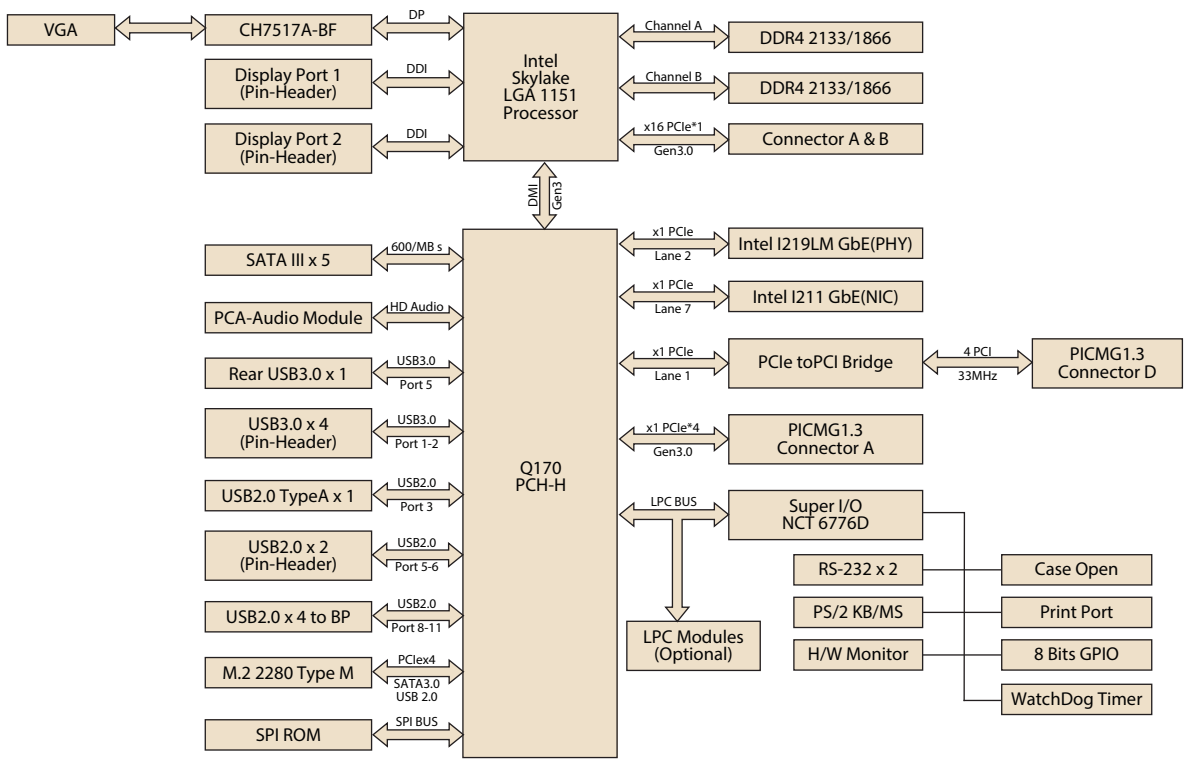

Ordering Information

Part Number	PCH	Memory	Backplane	LAN	VGA	DP/DVI-D	COM	SATA III	M.2	USB 2.0	USB 3.0	S/W Raid	AMT
PCE-5129G2-00A1E	Q170	Non-ECC	PCE-5BXX	2	Yes	2*	2	5	1	7	5	Yes	Yes

Note: DP/DVI-D cable is optional

Packing List

Part Number	Description	Quantity
1700003194	Serial ATA HDD data cable	x2
1700022749-11	Serial ATA HDD power cable	x1
1701260305	COM + printer ports cable kit	x1
1700060202	Keyboard and mouse Y-cable	x1
1700002204	2-port USB cable kit	x1
9689000068	Jumper package	x1
2190000902	Warranty Card	x1
2001512910	Startup manual	x1
2061512900	Utility CD	x1

Optional Accessories

Part Number	Description
1960052651N021	2U CPU cooler (PWM Fan)
1960049408N001	CPU cooler for 1U chassis
PCA-AUDIO-HDB1E	Audio module
PCA-TPM-00A1E	TPM module(Trust Platform management)
PCA-COM232-00A1E	4 Ports RS-232 Module by LPC
PCA-COM485-00A1E	4 Ports RS-485/422 Module by LPC
1700020277-01	2 ports USB 3.0 cable W/ BKT(30cm)
1700021831-01	DP to DVI-D cable w/ BKT
PCE-DP10-00A1E	DP to DP cable w/ BKT

I/O View

PCE-5129G2-00A1E